Specifications

Projector specifications

All specifications are subject to change without notice.

Optical

Resolution
- **MS527/MS517H/MS524A**: 800 x 600 SVGA
- **MX528/MX525A**: 1024 x 768 XGA
- **MW529/TW529/MW526A**: 1280 x 800 WXGA

Display system
- 1-CHIP DMD

Lens F/Number
- **MS527/MS517H/MS524A/MX528/MX525A:** F = 2.56 ~ 2.68, f = 22.04 ~ 24.14 mm
- **MW529/TW529/MW526A:** F = 2.56 ~ 2.68, f = 22 ~ 24.1 mm

Clear focus range
- **MS527/MS517H/MS524A/MX528/MX525A:** 2.38–7.15 m @ Wide, 2.62–7.87 m @ Tele
- **MW529/TW529/MW526A**: 2–6 m @ Wide, 2.2–6.6 m @ Tele

Lamp
- 190 W lamp

Electrical

Power supply
- AC100–240V, 2.7 A, 50–60 Hz (Automatic)

Power consumption
- 280 W (Max); < 0.5 W (Standby)

Mechanical

Weight
- 1.9 Kg (4.19 lbs)

Output terminals

RGB output
- D-Sub 15-pin (female) x 1

Speaker
- (Stereo) 2 watt x 1

Audio signal output
- PC audio jack x 1

Control

RS-232 serial control
- 9 pin x 1

IR receiver x 1

Input terminals

Computer input
- RGB input
  - D-Sub 15-pin (female) x 2

Video signal input
- S-VIDEO
  - Mini DIN 4-pin port x 1
- VIDEO
  - RCA jack x 1
- SD/HDTV signal input
  - Analog - Component RCA jack x 3 (through RGB input)
  - Digital - HDMI x 1

Audio signal input
- Audio in
  - PC audio jack x 1

USB port (Mini-B x 1)

Environmental Requirements

Operating temperature
- 0°C–40°C at sea level

Operating relative humidity
- 10%–90% (without condensation)

Operating altitude
- 0–1499 m at 0°C–35°C
- 1500–3000 m at 0°C–30°C (with High Altitude Mode on)

Dimensions

283 mm (W) x 95 mm (H) x 222 mm (D)

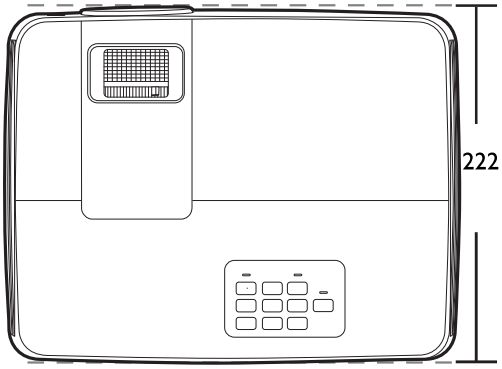

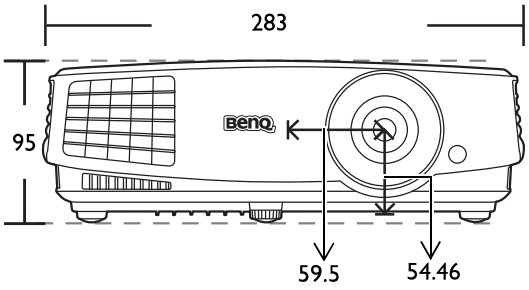

Unit: mm

Ceiling mount installation

Ceiling Mount screw: M4
(Max L = 25 mm; Min L = 20 mm)

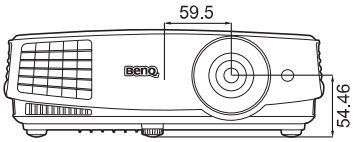

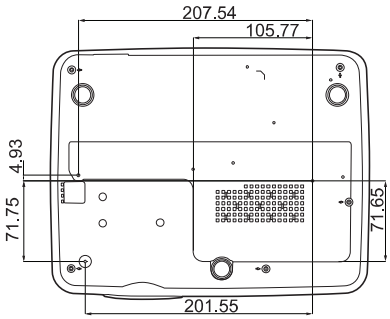

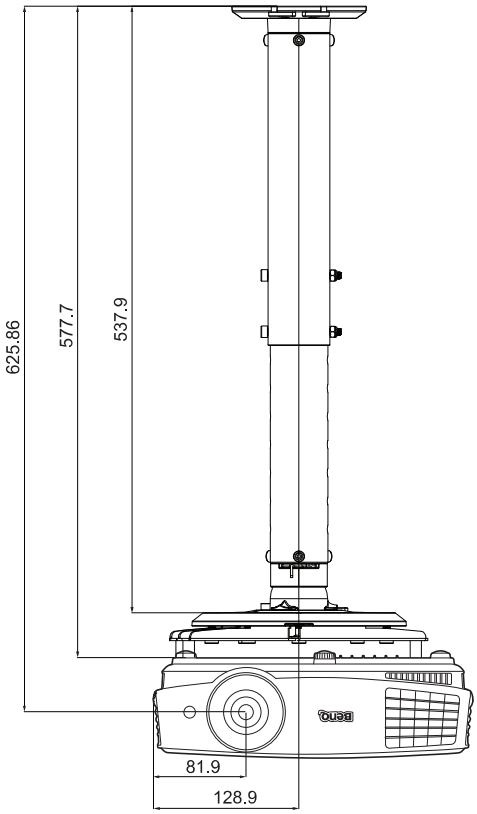

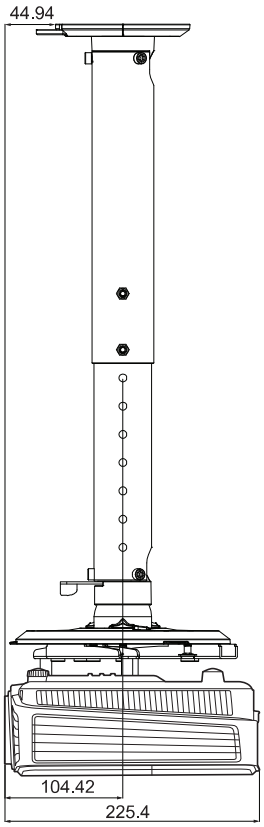

Unit: mm

Timing chart

Supported timing for PC input

Resolution	Mode	Vertical Frequency (Hz)	Horizontal Frequency (kHz)	Pixel Frequency (MHz)
640 x 480	VGA_60*	59.940	31.469	25.175
	VGA_72	72.809	37.861	31.500
	VGA_75	75.000	37.500	31.500
	VGA_85	85.008	43.269	36.000
720 x 400	720 x 400_70	70.087	31.469	28.3221
800 x 600	SVGA_60*	60.317	37.879	40.000
	SVGA_72	72.188	48.077	50.000
	SVGA_75	75.000	46.875	49.500
	SVGA_85	85.061	53.674	56.250
	SVGA_120** (Reduce Blanking)	119.854	77.425	83.000
1024 x 768	XGA_60*	60.004	48.363	65.000
	XGA_70	70.069	56.476	75.000
	XGA_75	75.029	60.023	78.750
	XGA_85	84.997	68.667	94.500
	XGA_120** (Reduce Blanking)	119.989	97.551	115.5
1152 x 864	1152 x 864_75	75	67.5	108
1024 x 576	BenQ Notebook_timing	60.0	35.820	46.966
1024 x 600	BenQ Notebook_timing	64.995	41.467	51.419
1280 x 720	1280 x 720_60*	60	45.000	74.250
1280 x 768	1280 x 768_60*	59.87	47.776	79.5
1280 x 800	WXGA_60*	59.810	49.702	83.500
	WXGA_75	74.934	62.795	106.500
	WXGA_85	84.880	71.554	122.500
	WXGA_120** (Reduce Blanking)	119.909	101.563	146.25
1280 x 1024	SXGA_60***	60.020	63.981	108.000
	SXGA_75	75.025	79.976	135.000
	SXGA_85	85.024	91.146	157.500
1280 x 960	1280 x 960_60***	60.000	60.000	108.000
	1280 x 960_85	85.002	85.938	148.500
1360 x 768	1360 x 768_60***	60.015	47.712	85.5
1440 x 900	WXGA+_60***	59.887	55.935	106.500
1400 x 1050	SXGA+_60***	59.978	65.317	121.750
1600 x 1200	UXGA***	60.000	75.000	162.000
1680 x 1050	1680 x 1050_60***	59.954	65.29	146.25
640 x 480@67Hz	MAC13	66.667	35.000	30.240
832 x 624@75Hz	MAC16	74.546	49.722	57.280
1024 x 768@75Hz	MAC19	74.93	60.241	80.000
1152 x 870@75Hz	MAC21	75.060	68.680	100.000

- *Supported timing for 3D signal in **Frame Sequential**, **Top Bottom** and **Side by Side** formats.
  Supported timing for 3D signal in **Frame Sequential format.
  ***Supported timing for 3D signal in **Top Bottom** and **Side by Side** formats.

- The timings showing above may not be supported due to EDID file and VGA graphic card limitations. It is possible that some timings cannot be chosen.

Supported timing for HDMI (HDCP) input

Resolution	Mode	Vertical Frequency (Hz)	Horizontal Frequency (kHz)	Pixel Frequency (MHz)
640 x 480	VGA_60*	59.940	31.469	25.175
	VGA_72	72.809	37.861	31.500
	VGA_75	75.000	37.500	31.500
	VGA_85	85.008	43.269	36.000
720 x 400	720 x 400_70	70.087	31.469	28.3221
800 x 600	SVGA_60*	60.317	37.879	40.000
	SVGA_72	72.188	48.077	50.000
	SVGA_75	75.000	46.875	49.500
	SVGA_85	85.061	53.674	56.250
	SVGA_120** (Reduce Blanking)	119.854	77.425	83.000
1024 x 768	XGA_60*	60.004	48.363	65.000
	XGA_70	70.069	56.476	75.000
	XGA_75	75.029	60.023	78.750
	XGA_85	84.997	68.667	94.500
	XGA_120** (Reduce Blanking)	119.989	97.551	115.5
1152 x 864	1152 x 864_75	75	67.5	108
1280 x 768	1280 x 768_60*	59.87	47.776	79.5
1024 x 576@60Hz	BenQ Notebook Timing	60.00	35.820	46.996
1024 x 600@65Hz	BenQ Notebook Timing	64.995	41.467	51.419
1280 x 720	1280 x 720_60*	60	45.000	74.250
1280 x 768	1280 x 768_60*	59.870	47.776	79.5
1280 x 800	WXGA_60*	59.810	49.702	83.500
	WXGA_75	74.934	62.795	106.500
	WXGA_85	84.880	71.554	122.500
	WXGA_120** (Reduce Blanking)	119.909	101.563	146.25
1280 x 1024	SXGA_60***	60.020	63.981	108.000
	SXGA_75	75.025	79.976	135.000
	SXGA_85	85.024	91.146	157.500
1280 x 960	1280 x 960_60***	60.000	60.000	108
	1280 x 960_85	85.002	85.938	148.500
1360 x 768	1360 x 768_60***	60.015	47.712	85.500
1440 x 900	WXGA+_60***	59.887	55.935	106.500
1400 x 1050	SXGA+_60***	59.978	65.317	121.750
1600 x 1200	UXGA***	60.000	75.000	162.000
1680 x 1050	1680 x 1050_60***	59.954	65.290	146.250
640 x 480@67Hz	MAC13	66.667	35.000	30.240
832 x 624@75Hz	MAC16	74.546	49.722	57.280
1024 x 768@75Hz	MAC19	74.93	60.241	80.000
1152 x 870@75Hz	MAC21	75.06	68.68	100.00

- *Supported timing for 3D signal in **Frame Sequential**, **Top Bottom** and **Side by Side** formats.
  Supported timing for 3D signal in **Frame Sequential format.
  ***Supported timing for 3D signal in **Top Bottom** and **Side by Side** formats.
- The timings showing above may not be supported due to EDID file and VGA graphic card limitations. It is possible that some timings cannot be chosen.

Timing	Resolution	Vertical Frequency (Hz)	Horizontal Frequency (kHz)	Pixel Frequency (MHz)
480i*	720 x 480	59.94	15.73	27
480p*	720 x 480	59.94	31.47	27
576i	720 x 576	50	15.63	27
576p	720 x 576	50	31.25	27
720/50p**	1280 x 720	50	37.5	74.25
720/60p***	1280 x 720	60	45.00	74.25
1080/50i****	1920 x 1080	50	28.13	74.25
1080/60i****	1920 x 1080	60	33.75	74.25
1080/24P**	1920 x 1080	24	27	74.25
1080/25P	1920 x 1080	25	28.13	74.25
1080/30P	1920 x 1080	30	33.75	74.25
1080/50P*****	1920 x 1080	50	56.25	148.5
1080/60P*****	1920 x 1080	60	67.5	148.5

*Supported timing for 3D signal in **Frame Sequential** format.
Supported timing for 3D signal in **Frame Packing, **Top Bottom** and **Side by Side** formats.
***Supported timing for 3D signal in **Frame Sequential**, **Frame Packing**, **Top Bottom** and **Side by Side** formats.
****Supported timing for 3D signal in **Side by Side** format.
*****Supported timing for 3D signal in **Top Bottom** and **Side by Side** formats.

Supported timing for Component-YPbPr input

Timing	Resolution	Vertical Frequency (Hz)	Horizontal Frequency (kHz)	Pixel Frequency (MHz)
480i*	720 x 480	59.94	15.73	13.5
480p*	720 x 480	59.94	31.47	27
576i	720 x 576	50	15.63	13.5
576p	720 x 576	50	31.25	27
720/50p	1280 x 720	50	37.5	74.25
720/60p*	1280 x 720	60	45.00	74.25
1080/50i	1920 x 1080	50	28.13	74.25
1080/60i	1920 x 1080	60	33.75	74.25
1080/24P	1920 x 1080	24	27	74.25
1080/25P	1920 x 1080	25	28.13	74.25
1080/30P	1920 x 1080	30	33.75	74.25
1080/50P	1920 x 1080	50	56.25	148.5
1080/60P	1920 x 1080	60	67.5	148.5

- *Supported timing for 3D signal in **Frame Sequential** format.
- Displaying a 1080i(1125i)@60Hz or 1080i(1125i)@50Hz signal may result in slight image vibration.

Supported timing for Video and S-Video inputs

Video mode	Horizontal Frequency (kHz)	Vertical Frequency (Hz)	Color sub-carrier Frequency (MHz)
NTSC*	15.73	60	3.58
PAL	15.63	50	4.43
SECAM	15.63	50	4.25 or 4.41
PAL-M	15.73	60	3.58
PAL-N	15.63	50	3.58
PAL-60	15.73	60	4.43
NTSC4.43	15.73	60	4.43

*Supported timing for 3D signal in **Frame Sequential** format.